Model# R3825

3/8” Air Straight Drill

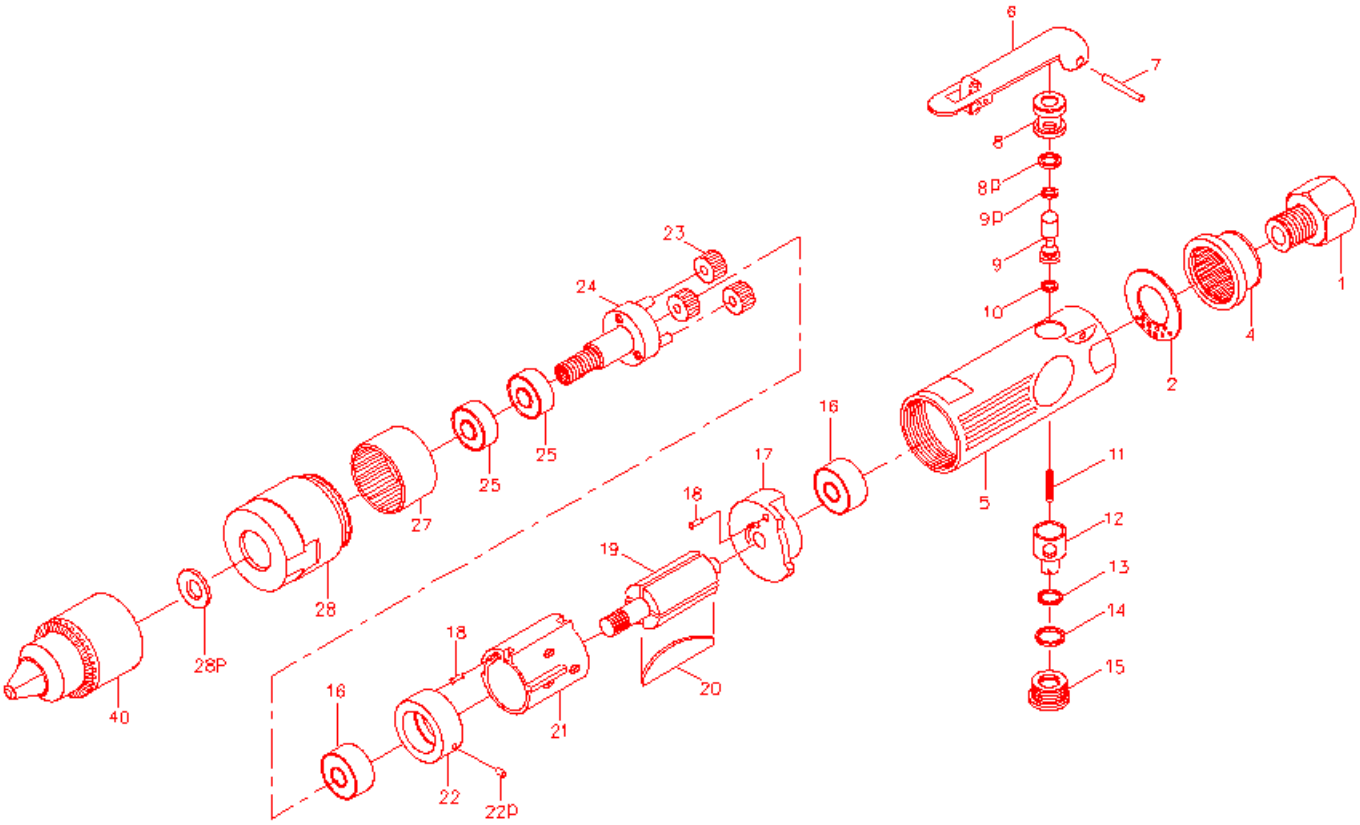

Replacement Part list for R3825 3/8" AIR STRAIGHT DRILL

Ref.	Part#.	Description	Ref.	Part#.	Description
1	R3825-1	Inlet bushing	16	R3825-16	Ball Bearing (2)
2	R3825-2	Circlip	17	R3825-17	Rear End Plate
4	R3825-3	Exhaust Defector	18	R3825-18	Pin (2)
5	R3825-5	Motor Housing	19	R3825-19	Rotor
6	R3825-6	Throttle Lever	20	R3825-20	Rotor Blades (4)
7	R3825-7	Throttle Lever Pin	21	R3825-21	Cylinder
8	R3825-8	Valve Bushing	22	R3825-22	Front End Plate
8P	R3825-8P	"O" Ring	22P	R3825-22P	Pin
9	R3825-9	Throttle Valve	23	R3825-23	Idler Gear (3)
9P	R3825-9P	"O" Ring	24	R3825-24	Idler Gear Plate
10	R3825-10	"O" Ring	25	R3825-25	Ball Bearing (2)
11	R3825-11	Spring	27	R3825-27	Ring Gear
12	R3825-12	Air Regulator	28	R3825-28	Bearing and Gear Cap
13	R3825-13	"O" Ring	28P	R3825-28P	Washer
14	R3825-14	"O" Ring	40	R3825-40	3/8” Drill Chuck
15	R3825-15	Valve Screw			