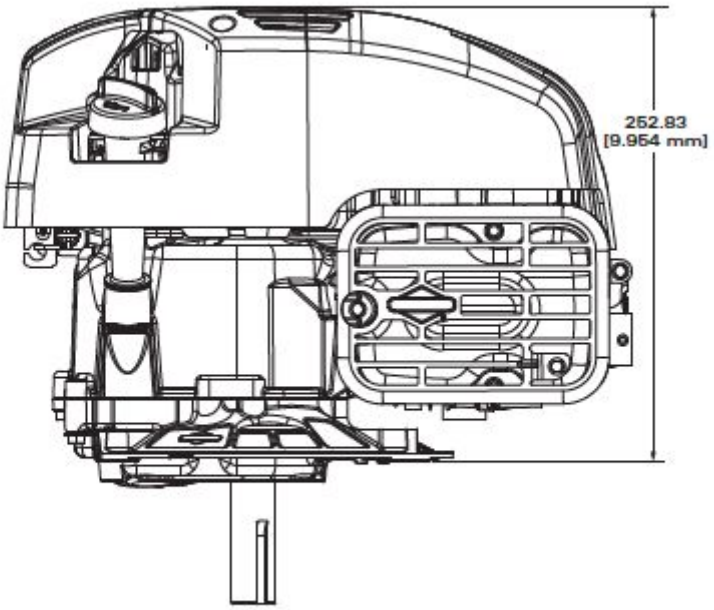
252.83
[9.954 mm]

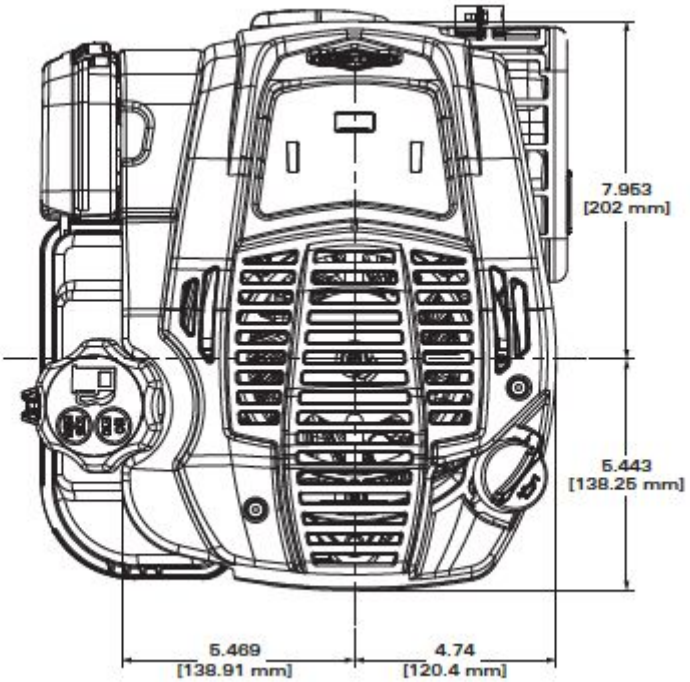
7.953
[202 mm]
5.443
[138.25 mm]
5.469
[138.91 mm]
4.74
[120.4 mm]