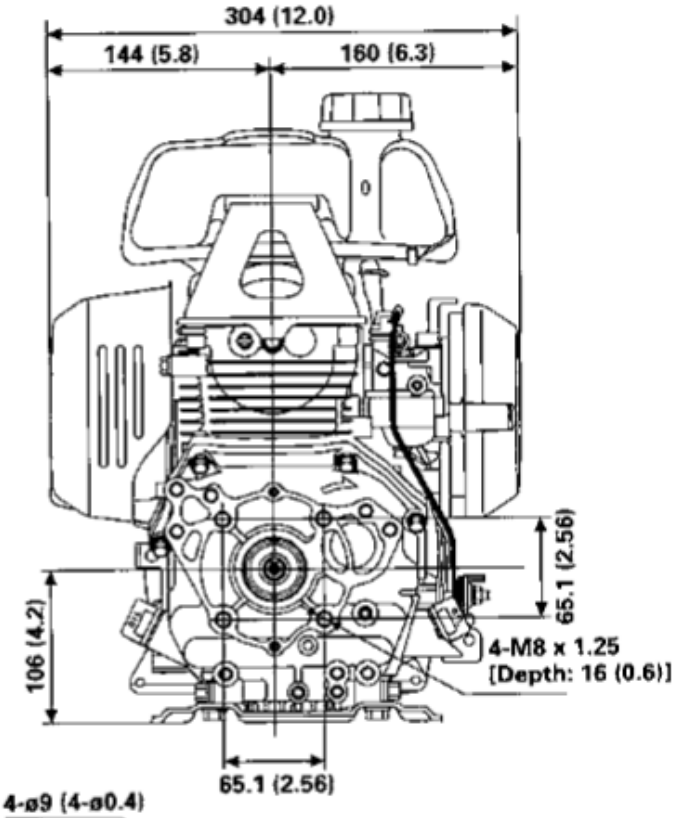
304 (12.0)
144 (5.8)
160 (6.3)
65.1 (2.56)
106 (4.2)
4-M8 x 1.25
[Depth: 16 (0.6)]
65.1 (2.56)

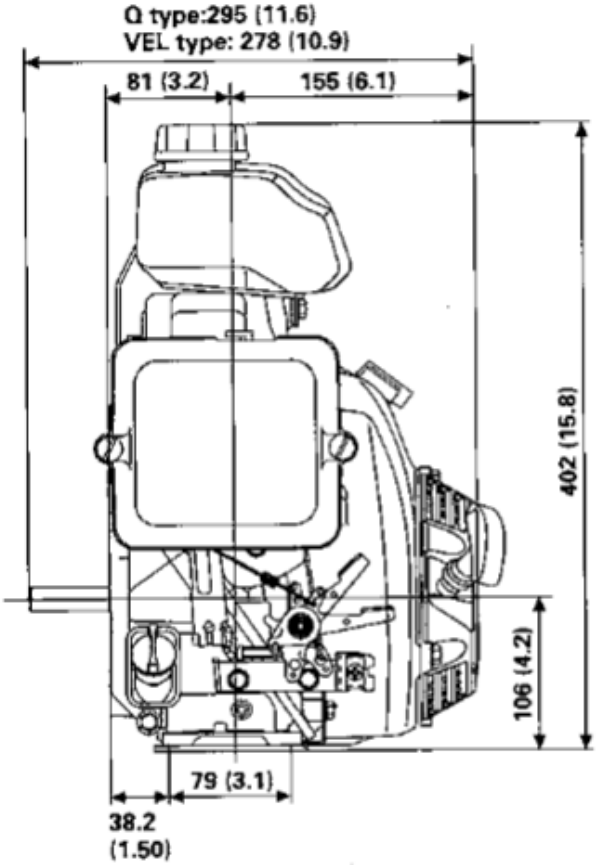
Q type:295 (11.6)
VEL type: 278 (10.9)
81 (3.2)
155 (6.1)
402 (15.8)
106 (4.2)
79 (3.1)
38.2
(1.50)

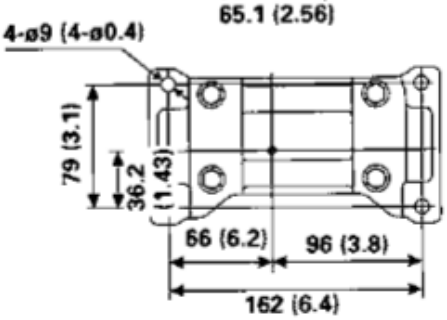
4-ø9 (4-ø0.4)
79 (3.1)
36.2
(1.43)
66 (6.2)
96 (3.8)
162 (6.4)