GX160 (WITHOUT REDUCTION)
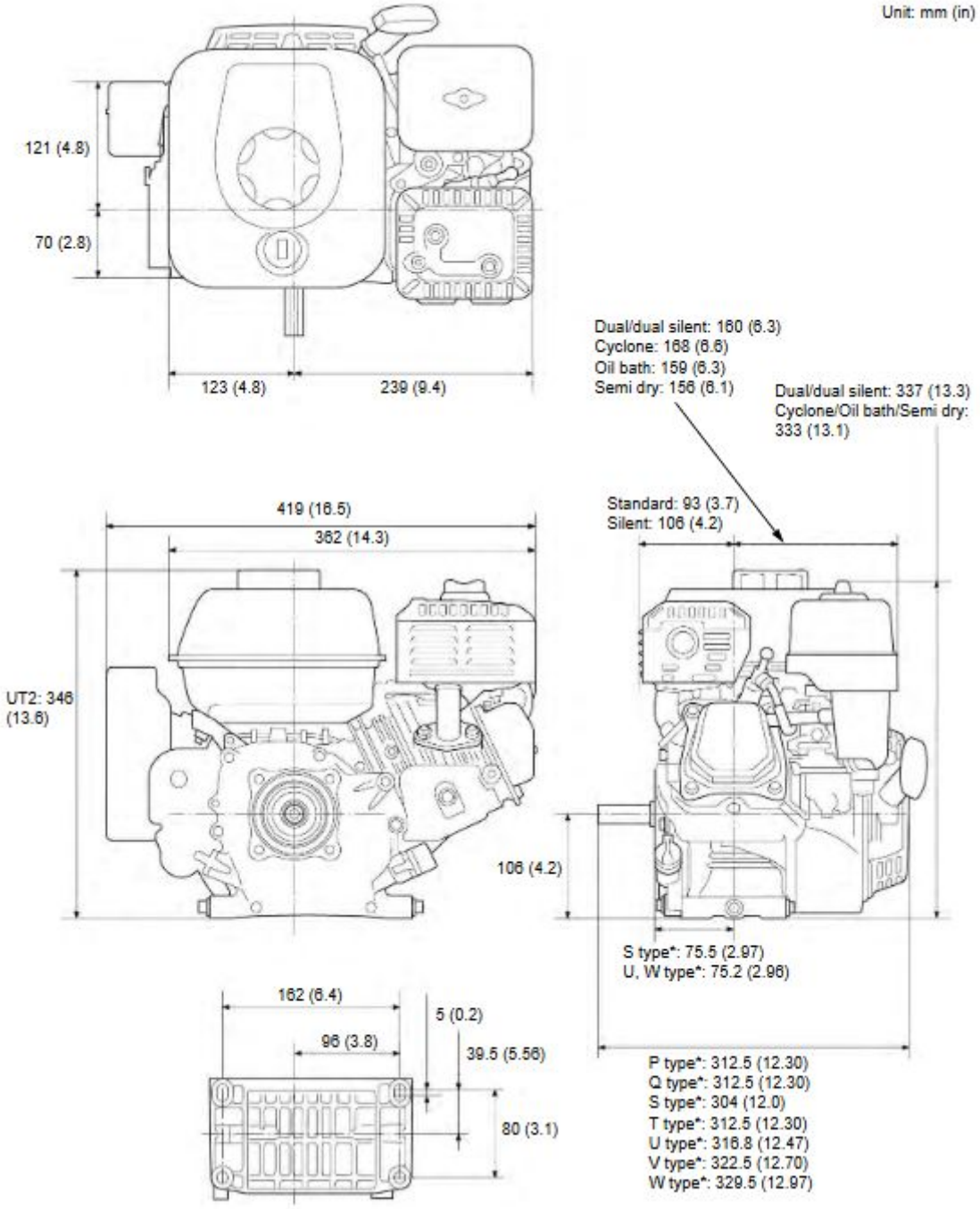
Unit: mm (in)