REVISIONS						
ZONE	REV	ECN	DESCRIPTION	DATE	DRAWN	APPD
	A	ITS103291	INITIAL RELEASE	2011AUG11	G.Levi	J.Smith

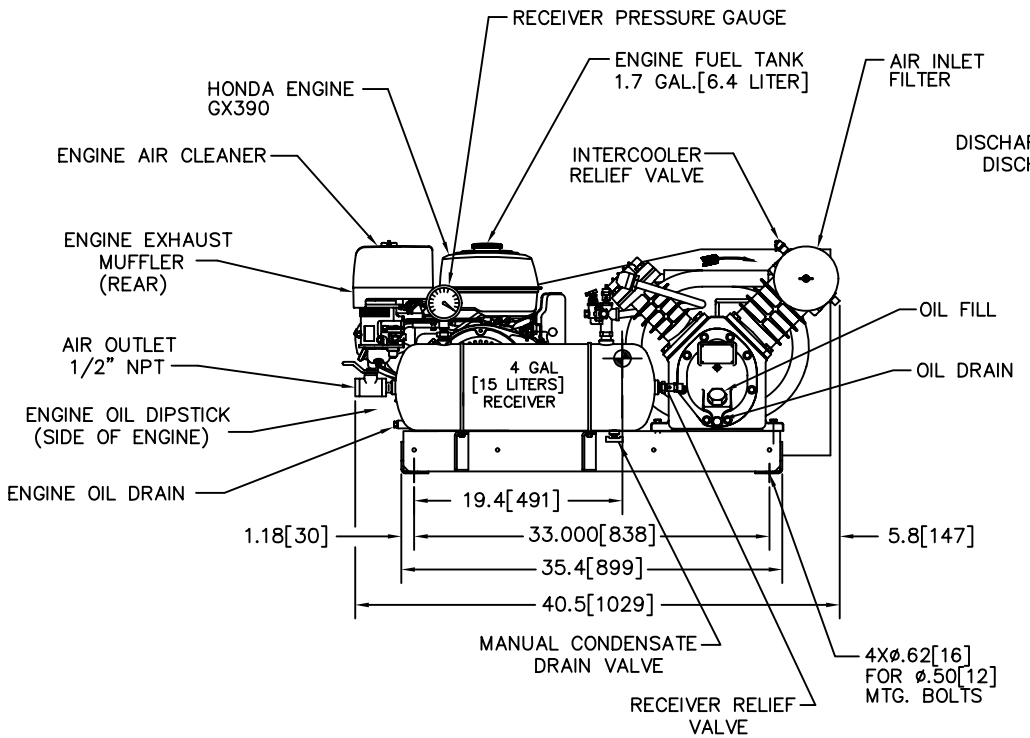

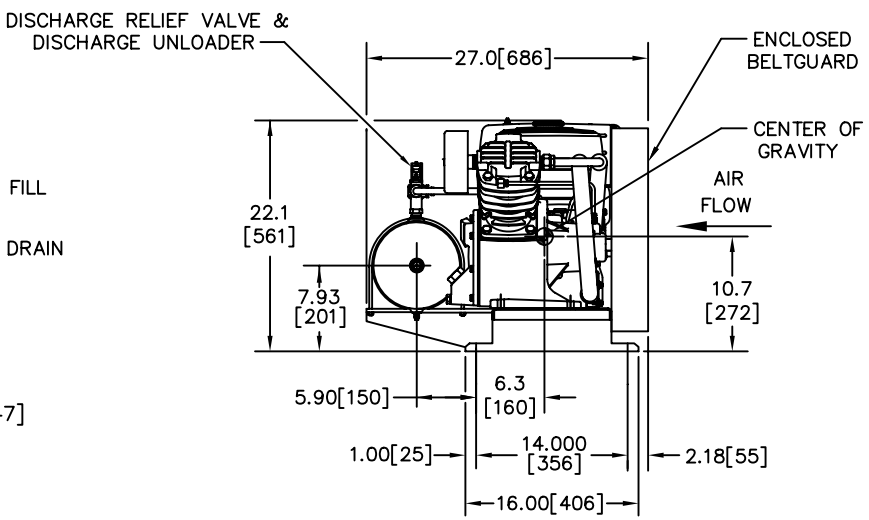

NOTES:

1. FOUNDATION OR FLOOR MUST BE LEVEL AND SUPPORT ALL FEET EQUALLY; IF NECESSARY SHIM OR GROUT THE FOURTH FOOT.
2. FOUNDATION BOLTS SHOULD PROJECT THRU NUTS AT LEAST 1/2"[13] TO ALLOW FOR LEVELING.
3. ALLOW AT LEAST 12.00[305] CLEARANCE MIN. ON ALL SIDES FOR PROPER AIR CIRCULATION.
4. ALL UNSPECIFIED TOLERANCES: XXX = ±.12[3]
   XX = ±.25[6]
   X = ±.50[13]
5. DIMENSIONS IN [ ] ARE MILLIMETER DIMENSIONS UNLESS OTHERWISE SPECIFIED.
6. WEIGHT: APPROX. 260 LBS. [118 KG]

DRAWING IN INCHES [METRIC]

APPROVED FOR:		SIZE:	JOB:	SPEC:
IR ORDER NO.		MODEL:	ITEM:	CONTRACTOR:
CUSTOMER:		PISTON DISPLACEMENT cfm [m3/min]:	ARCH. ENGR.:	
		SPEED rpm:		
		DISCHARGE PRESSURE RATING psig [kPa]:		
CUSTOMER ORDER NO.		ACTUAL DELIVERY cfm [m3/min]		
PER:	DATE:	REGULATION:		

COPYRIGHT © 2009 Ingersoll-Rand Company ALL RIGHTS RESERVED

WARNING: THE EXPORT OR REEXPORT OF THIS DRAWING OR A PRODUCT PRODUCED BY THIS DRAWING IS SUBJECT TO U.S. EXPORT ADMINISTRATION REGULATIONS AND OTHER APPLICABLE GOVERNMENT RESTRICTIONS OR REGULATIONS.

PROPRIETARY NOTICE

THIS DRAWING CONTAINS CONFIDENTIAL AND TRADE SECRET INFORMATION. IS THE PROPERTY OF INGERSOLL-RAND CO., AND IS GIVEN TO THE RECEIVER IN CONFIDENCE. THE RECEIVER BY RECEPTION AND RETENTION OF THE DRAWING ACCEPTS THE DRAWING IN CONFIDENCE AND AGREES THAT, EXCEPT AS AUTHORIZED IN WRITING BY INGERSOLL-RAND CO., IT WILL (1) NOT USE THE DRAWING OR ANY COPY THEREOF OR THE CONFIDENTIAL OR TRADE SECRET INFORMATION THEREIN; (2) NOT COPY THE DRAWING; (3) NOT DISCLOSE TO OTHERS EITHER THE DRAWING OR THE CONFIDENTIAL OR TRADE SECRET INFORMATION THEREIN; AND (4) UPON COMPLETION OF THE NEED TO RETAIN THE DRAWING, OR UPON DEMAND, RETURN THE DRAWING, ALL COPIES THEREOF, AND ALL MATERIAL COPIED THEREFROM.

THIRD ANGLE PROJECTION

DRAWN	G.Levi	2011AUG11
CHECKED	D.Adams	2011AUG11
APPROVED	J.Smith	2011AUG11

Ingersoll Rand

TITLE: GENERAL ARRANGEMENT 2475X13GH HONDA

SIZE	ESTIMATED WEIGHT (KG LBS OR OUNCES OR GRAMS)	DWG NO.	REV
A1	ABOVE	46825337	A

SCALE: NONE | UNIT: | SHEET 1 OF 1